BATTERIES OF CYLINDERS OF 80L WITH CONTINUOUS WEIGHING (ONE ROW)

AEX/SBPX80FM

Specifications						
Reference	Nº of cylinders	Maximum load	Total long (mm)	Total Height (mm)	Manifold output*	Manifold Reference*
AEX/SBP280FM	2	184 Kg	1284 mm	2482	Flange 2 1/2"	CF212S2I080
AEX/SBP380FM	3	276 Kg	1640 mm	2500	Flange 3"	CF3S3I080
AEX/SBP480FM	4	368 Kg	1980 mm	2500	Flange 3"	CF3S4I080
AEX/SBP580FM	5	460 Kg	2352 mm	2546	Flange 4"	CF4S5I080
AEX/SBP680FM	6	552 Kg	2692 mm	2546	Flange 4"	CF4S6I080
AEX/SBP780FM	7	644 Kg	3032 mm	2546	Flange 4"	CF4S7I080
AEX/SBP880FM	8	736 Kg	3397 mm	2591	Flange 5"	CF5S8I080
AEX/SBP980FM	9	828 Kg	3737 mm	2591	Flange 5"	CF5S9I080
AEX/SBP1080FM	10	920 Kg	4077 mm	2591	Flange 5"	CF5S10I080
AEX/SBP1180FM	11	1012 Kg	4433 mm	2620	Flange 6"	CF6S11I080
AEX/SBP1280FM	12	1104 Kg	4773 mm	2620	Flange 6"	CF6S12I080
AEX/SBP1380FM	13	1196 Kg	5113 mm	2620	Flange 6"	CF6S13I080
AEX/SBP1480FM	14	1288 Kg	5453 mm	2620	Flange 6"	CF6S14I080

** The manifold diameter may vary depending on hydraulic calculations of each installation.

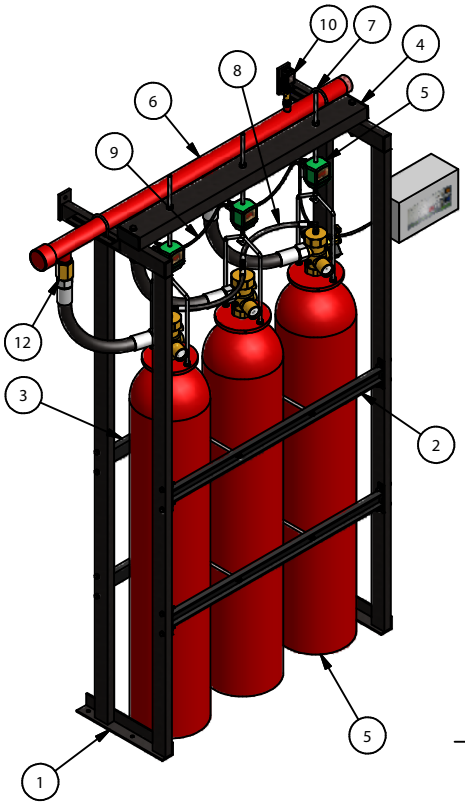

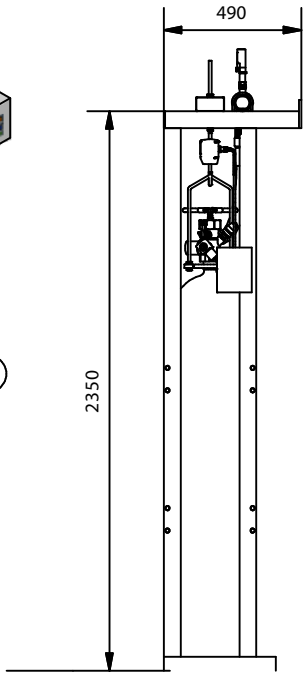

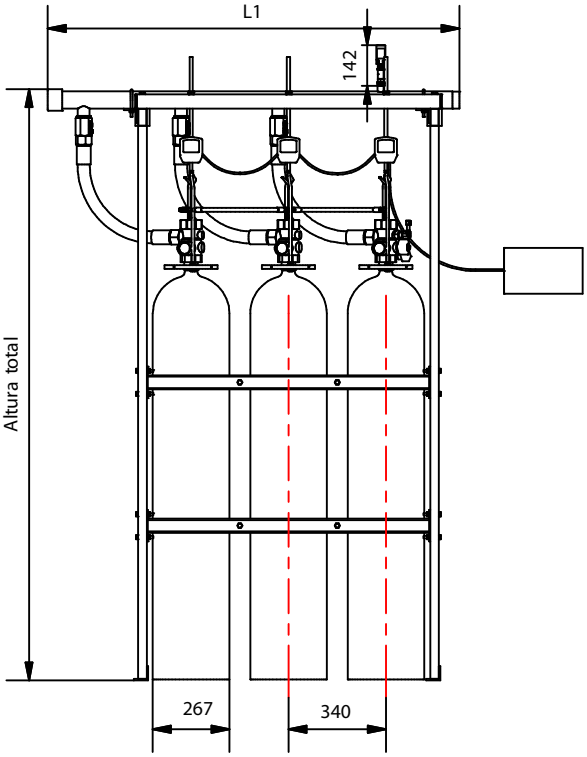

Parts list		Parts list	
Part nº	Reference and Description	Part nº	Reference and Description
1	HP-2350P - Support feet single row with continuous weighing 80L	7	HA(y) - U-bolt (y) inches
2	HTPA(x) - Rear crossbar for (x) cylindres	8	LD18 - Trigger hose
3	HTPP(x) - Preceding crossbar for(x) cylindres	9	AEX/LU - Union microphonic hose
4	HS(x) - Battery suspension support (x) cylindres	10	AEX-CP1 - Pass contactor (optional)
5	BFE80 - Cylindre 80 L	11	L112N - Hose 1 1/2"
6	SEE TABLE - Descharge Manifold		

aguilera extinción

Av. Alfonso Peña Boeuf, 6 y 9
28022 MADRID - ESPAÑA
TEL: +34 913121656
FAX: +34 913295820

DATA SHEET
BATTERIES OF CYLINDERS OF 80 L WITH CONTINUOUS WEIGHING (ONE ROW)

Description: Complete Cylinder Battery, including manual & electric actuator, pressure gauge, hoses and manifold

Code sheet:	Group sheet:	Reference:	Drawn:	Date:	Revised:	Date:	Review:	Format:
AEX-FTC-04-013	HFC 227ea	VER TABLA	DCM	12/12/2018	ENC	12/12/2018	1	A4

Note: Aguilera Extinción S.L. Reserves the right to modify any of the characteristics stated in this document without notice.